FRED Pt™ TO-218
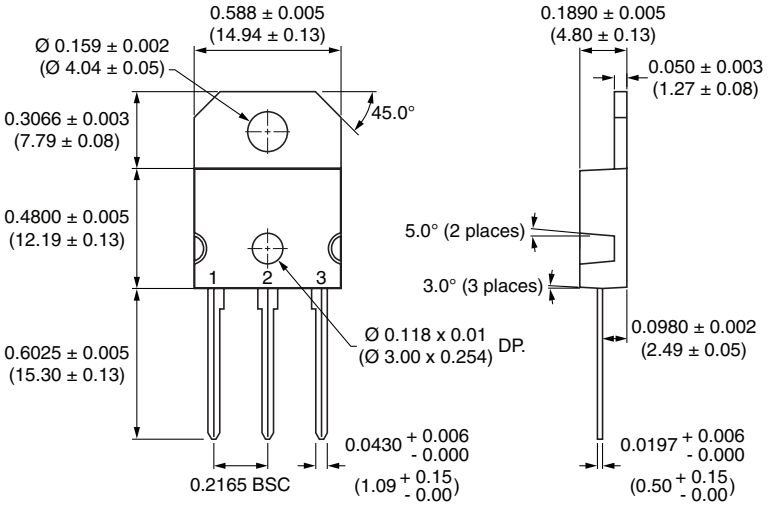
DIMENSIONS in millimeters (inches)