TO-208AC (TO-65)

DIMENSIONS in millimeters (inches)

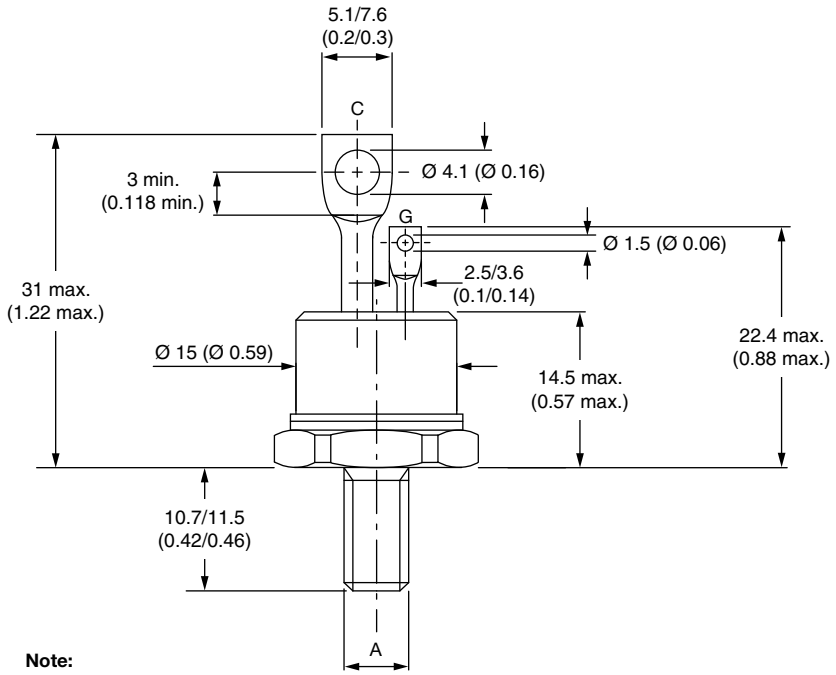

Note:
A = Anode
C = Cathode
G = Gate

1/4"-28UNF-2A
for metric device M6 x 1

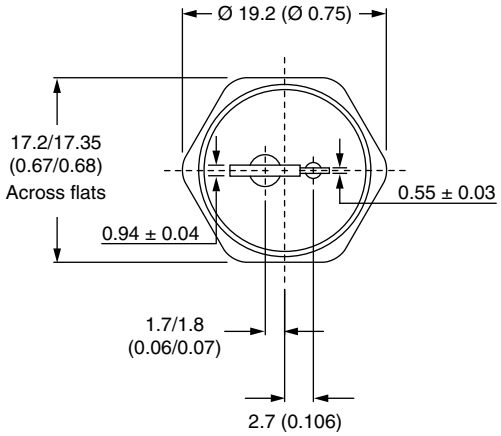

For technical questions within your region: DiodesAmercas@vishay.com, DiodesAsia@vishay.com, DiodesEurope@vishay.com

THIS DOCUMENT IS SUBJECT TO CHANGE WITHOUT NOTICE. THE PRODUCTS DESCRIBED HEREIN AND THIS DOCUMENT ARE SUBJECT TO SPECIFIC DISCLAIMERS, SET FORTH AT www.vishay.com/doc?91000