High Voltage Input Rectifier Diode, 45 A

TO-247AD 2L

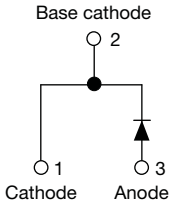

VS-45EPS..L-M3

TO-247AD 3L

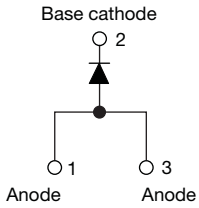

VS-45APS..L-M3

FEATURES

- Very low forward voltage drop
- Glass passivated pellet chip junction
- Designed and qualified according to JEDEC® - JESD 47
- Flexible solution for reliable AC power rectification
- High surge, low V_F rugged blocking diode for DC charging stations
- AEC-Q101 qualified P/N available (VS-45EPS12LHM3, VS-45APS12LHM3)
- Material categorization: for definitions of compliance please see www.vishay.com/doc?99912

RoHS COMPLIANT
HALOGEN FREE

APPLICATIONS

- On-board and off-board EV / HEV battery chargers
- Renewable energy inverters
- Input rectification for single and three phase bridge configurations
- Vishay Semiconductors switches and output rectifiers which are available in identical package outlines

DESCRIPTION

High voltage rectifiers optimized for very low forward voltage drop with moderate leakage.
These devices are intended for use in main rectification (single or three phase bridge).

PRIMARY CHARACTERISTICS	
$I_{F(AV)}$	45 A
V_R	800 V, 1200 V
V_F at I_F	1.14 V
I_{FSM}	500 A
T_J max.	150 °C
Package	TO-247AD 2L, TO-247AD 3L
Circuit configuration	Single

MAJOR RATINGS AND CHARACTERISTICS			
SYMBOL	CHARACTERISTICS	VALUES	UNITS
$I_{F(AV)}$	Sinusoidal waveform	45	A
V_{RRM}		800, 1200	V
I_{FSM}		500	A
V_F	20 A, T_J = 25 °C	1.0	V
T_J		-40 to +150	°C

VOLTAGE RATINGS			
PART NUMBER	V_{RRM}, MAXIMUM PEAK REVERSE VOLTAGE V	V_{RSM}, MAXIMUM NON-REPETITIVE PEAK REVERSE VOLTAGE V	I_{RRM} AT 150 °C mA
VS-45EPS08L-M3	800	900	1.0
VS-45APS08L-M3	800	900	
VS-45EPS12L-M3	1200	1300	1.0
VS-45APS12L-M3	1200	1300	

ABSOLUTE MAXIMUM RATINGS				
PARAMETER	SYMBOL	TEST CONDITIONS	VALUES	UNITS
Maximum average forward current	$I_{F(AV)}$	T_C = 109 °C, 180° conduction half sine wave	45	A
Maximum peak one cycle non-repetitive surge current	I_{FSM}	10 ms sine pulse, rated V_{RRM} applied	420	
		10 ms sine pulse, no voltage reapplied	500	
Maximum I^2t for fusing	I^2t	10 ms sine pulse, rated V_{RRM} applied	884	A^2s
		10 ms sine pulse, no voltage reapplied	1250	
Maximum $I^2\sqrt{t}$ for fusing	$I^2\sqrt{t}$	t = 0.1 ms to 10 ms, no voltage reapplied	12 500	$A^2\sqrt{s}$

For technical questions within your region: DiodesAmericas@vishay.com, DiodesAsia@vishay.com, DiodesEurope@vishay.com
THIS DOCUMENT IS SUBJECT TO CHANGE WITHOUT NOTICE. THE PRODUCTS DESCRIBED HEREIN AND THIS DOCUMENT ARE SUBJECT TO SPECIFIC DISCLAIMERS, SET FORTH AT www.vishay.com/doc?91000

ELECTRICAL SPECIFICATIONS					
PARAMETER	SYMBOL	TEST CONDITIONS		VALUES	UNITS
Maximum forward voltage drop	V_{FM}	45 A, T_J = 25 °C		1.14	V
Forward slope resistance	r_t	T_J = 150 °C		7.16	mΩ
Threshold voltage	$V_{F(TO)}$			0.74	V
Maximum reverse leakage current	I_{RM}	T_J = 25 °C	V_R = rated V_{RRM}	0.1	mA
		T_J = 150 °C		1.0	

THERMAL - MECHANICAL SPECIFICATIONS					
PARAMETER		SYMBOL	TEST CONDITIONS	VALUES	UNITS
Maximum junction and storage temperature range		T_J, T_{Stg}		-40 to +150	°C
Maximum thermal resistance, unction to case		R_{thJC}	DC operation	0.4	°C/W
Maximum thermal resistance, junction to ambient		R_{thJA}		40	
Typical thermal resistance, case to heatsink		R_{thCS}	Mounting surface, smooth, and greased	0.25	
Approximate weight				6	g
				0.21	oz.
Mounting torque	minimum			6 (5)	kgf · cm (lbf · in)
	maximum			12 (10)	
Marking device			Case style TO-247AD 2L	45EPS08L	
			Case style TO-247AD 3L	45APS08L	
			Case style TO-247AD 2L	45EPS12L	
			Case style TO-247AD 3L	45APS12L	

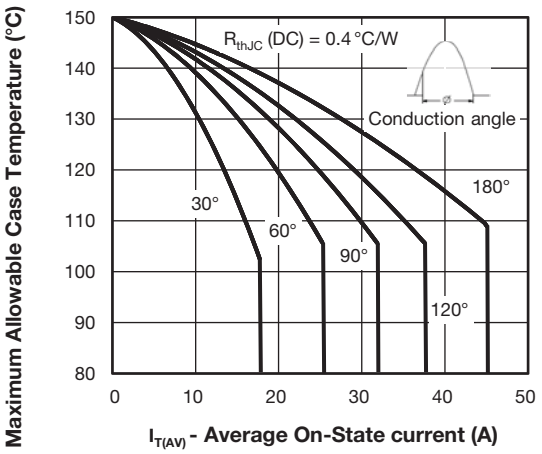

Fig. 1 - Current Rating Characteristics

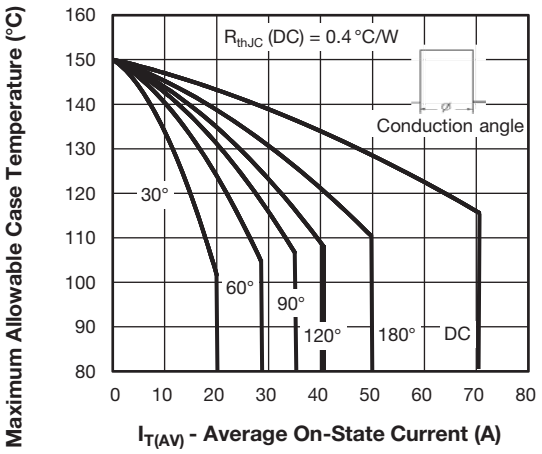

Fig. 2 - Current Rating Characteristics

For technical questions within your region: DiodesAmericas@vishay.com, DiodesAsia@vishay.com, DiodesEurope@vishay.com
THIS DOCUMENT IS SUBJECT TO CHANGE WITHOUT NOTICE. THE PRODUCTS DESCRIBED HEREIN AND THIS DOCUMENT ARE SUBJECT TO SPECIFIC DISCLAIMERS, SET FORTH AT www.vishay.com/doc?91000

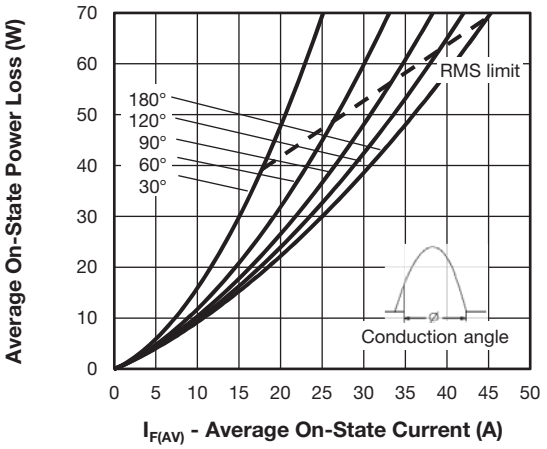

Fig. 3 - Forward Power Loss Characteristics

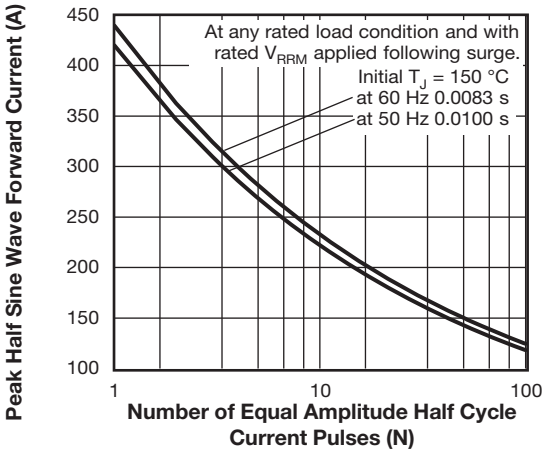

Fig. 5 - Maximum Non-Repetitive Surge Current

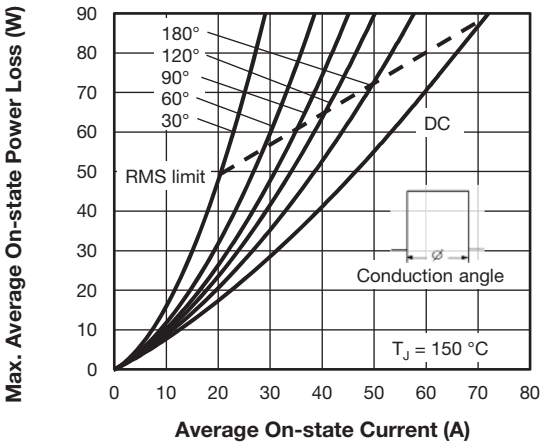

Fig. 4 - Forward Power Loss Characteristics

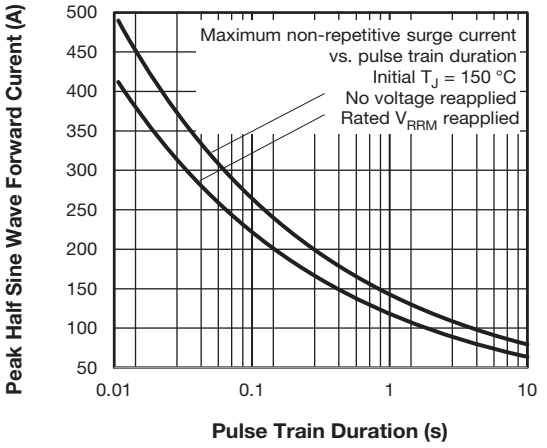

Fig. 6 - Maximum Non-Repetitive Surge Current

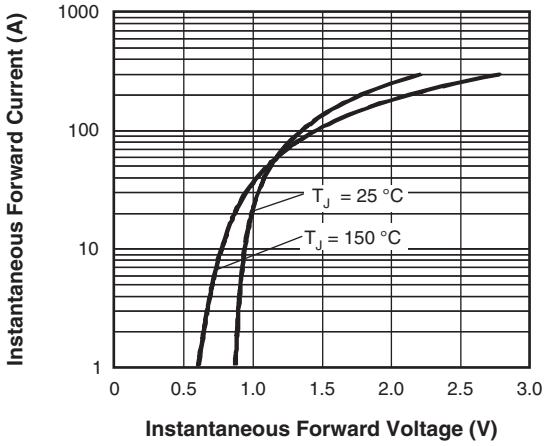

Fig. 7 - Forward Voltage Drop Characteristics

For technical questions within your region: DiodesAmericas@vishay.com, DiodesAsia@vishay.com, DiodesEurope@vishay.com
THIS DOCUMENT IS SUBJECT TO CHANGE WITHOUT NOTICE. THE PRODUCTS DESCRIBED HEREIN AND THIS DOCUMENT ARE SUBJECT TO SPECIFIC DISCLAIMERS, SET FORTH AT www.vishay.com/doc?91000

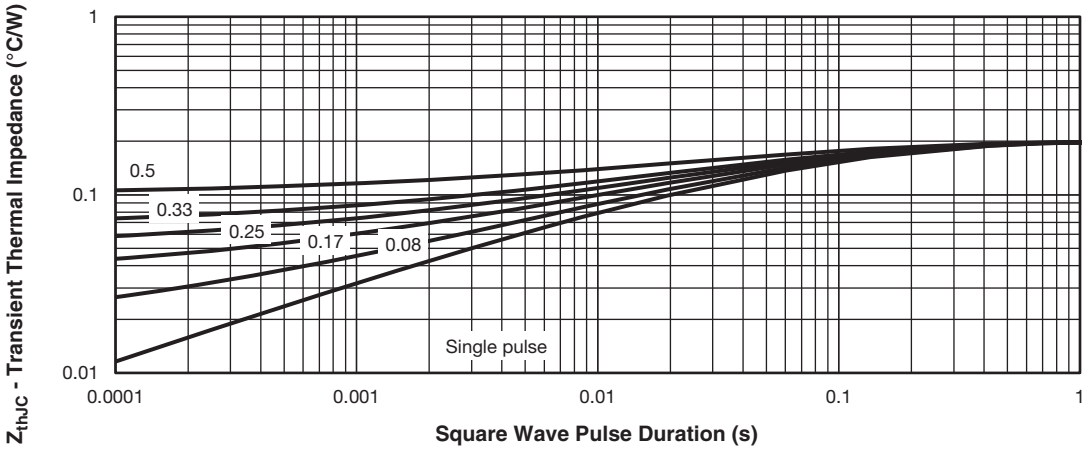

Fig. 8 - Thermal Impedance Z_{thJC} Characteristics

ORDERING INFORMATION TABLE

Device code	VS-	45	E	P	S	12	L	-M3
	1	2	3	4	5	6	7	8

1 - Vishay Semiconductors product

2 - Current rating (45 = 45 A)

3 - Circuit configuration:

E = single, 2 pins
A = single 3 pins

4 - Package:

P = TO-247AD

5 - Type of silicon:

S = standard recovery rectifier

6 - Voltage code x 100 = V_{RRM}

08 = 800 V
12 = 1200 V

7 - L = long leads

8 - Environmental digit:

-M3 = halogen-free, RoHS-compliant, and terminations lead (Pb)-free

ORDERING INFORMATION (Example)			
PREFERRED P/N	**QUANTITY PER T/R**	**MINIMUM ORDER QUANTITY**	**PACKAGING DESCRIPTION**
VS-45EPS08L-M3	25	500	Antistatic plastic tubes
VS-45APS08L-M3	25	500	Antistatic plastic tubes
VS-45EPS12L-M3	25	500	Antistatic plastic tubes
VS-45APS12L-M3	25	500	Antistatic plastic tubes

LINKS TO RELATED DOCUMENTS		
Dimensions	TO-247AD 2L	www.vishay.com/doc?95536
	TO-247AD 3L	www.vishay.com/doc?95626
Part marking information	TO-247AD 2L	www.vishay.com/doc?95648
	TO-247AD 3L	www.vishay.com/doc?95007

For technical questions within your region: DiodesAmericas@vishay.com, DiodesAsia@vishay.com, DiodesEurope@vishay.com
THIS DOCUMENT IS SUBJECT TO CHANGE WITHOUT NOTICE. THE PRODUCTS DESCRIBED HEREIN AND THIS DOCUMENT ARE SUBJECT TO SPECIFIC DISCLAIMERS, SET FORTH AT www.vishay.com/doc?91000

TO-247AD 2L

DIMENSIONS in millimeters and inches

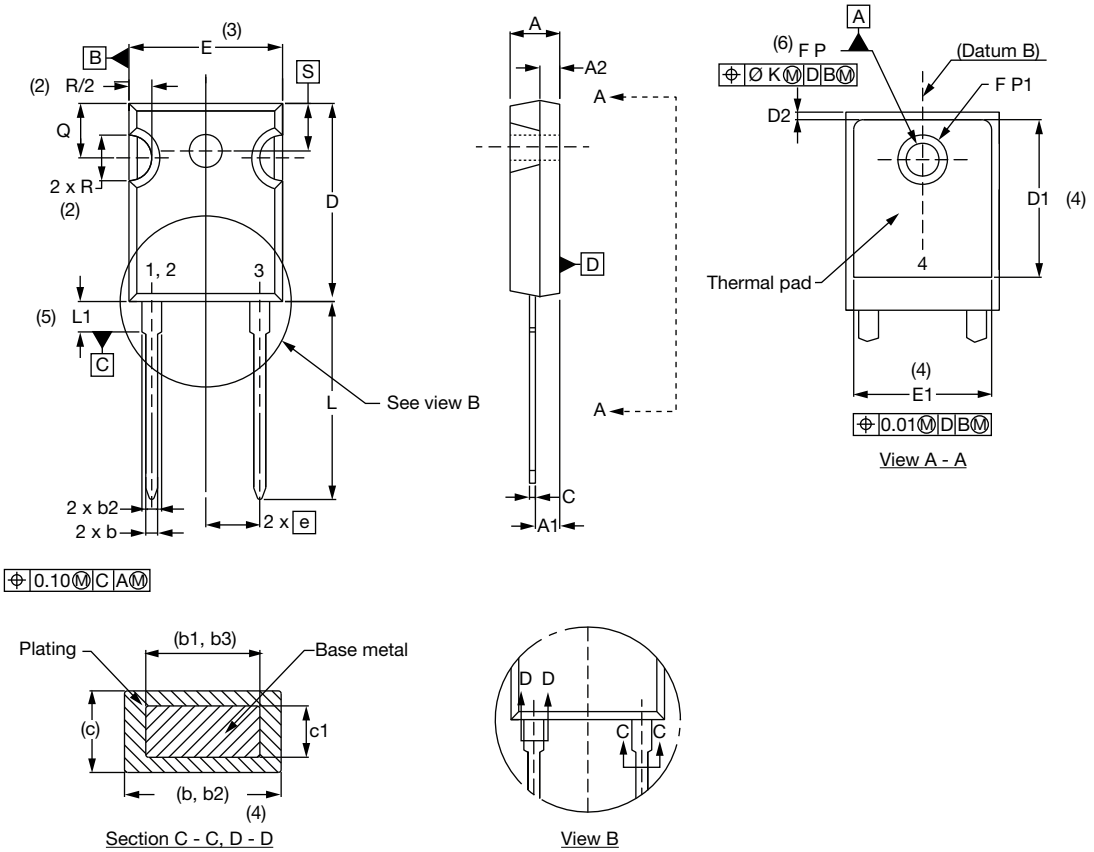

SYMBOL	MILLIMETERS		INCHES		NOTES
	MIN.	MAX.	MIN.	MAX.	
A	4.65	5.31	0.183	0.209	
A1	2.21	2.59	0.087	0.102	
A2	1.50	2.49	0.059	0.098	
b	0.99	1.40	0.039	0.055	
b1	0.99	1.35	0.039	0.053	
b2	1.65	2.39	0.065	0.094	
b3	1.65	2.34	0.065	0.092	
c	0.38	0.89	0.015	0.035	
c1	0.38	0.84	0.015	0.033	
D	19.71	20.70	0.776	0.815	3
D1	13.08	-	0.515	-	4
D2	0.51	1.35	0.020	0.053	

SYMBOL	MILLIMETERS		INCHES		NOTES
	MIN.	MAX.	MIN.	MAX.	
E	15.29	15.87	0.602	0.625	3
E1	13.46	-	0.53	-	
e	5.46 BSC		0.215 BSC		
Ø K	0.254		0.010		
L	19.81	20.32	0.780	0.800	
L1	3.71	4.29	0.146	0.169	
Ø P	3.56	3.66	0.14	0.144	
Ø P1	-	6.98	-	0.275	
Q	5.31	5.69	0.209	0.224	
R	4.52	5.49	0.178	0.216	
S	5.51 BSC		0.217 BSC		

Notes

(1) Dimensioning and tolerancing per ASME Y14.5M-1994
(2) Contour of slot optional
(3) Dimension D and E do not include mold flash. These dimensions are measured at the outermost extremes of the plastic body
(4) Thermal pad contour optional with dimensions D1 and E1
(5) Lead finish uncontrolled in L1
(6) Ø P to have a maximum draft angle of 1.5 to the top of the part with a maximum hole diameter of 3.91 mm (0.154")
(7) Outline conforms to JEDEC® outline TO-247 with exception of dimension A min., D, E min., Q min., S, and note 4

For technical questions within your region: DiodesAmericas@vishay.com, DiodesAsia@vishay.com, DiodesEurope@vishay.com
THIS DOCUMENT IS SUBJECT TO CHANGE WITHOUT NOTICE. THE PRODUCTS DESCRIBED HEREIN AND THIS DOCUMENT ARE SUBJECT TO SPECIFIC DISCLAIMERS, SET FORTH AT www.vishay.com/doc?91000

TO-247AD 3L

DIMENSIONS in millimeters and inches

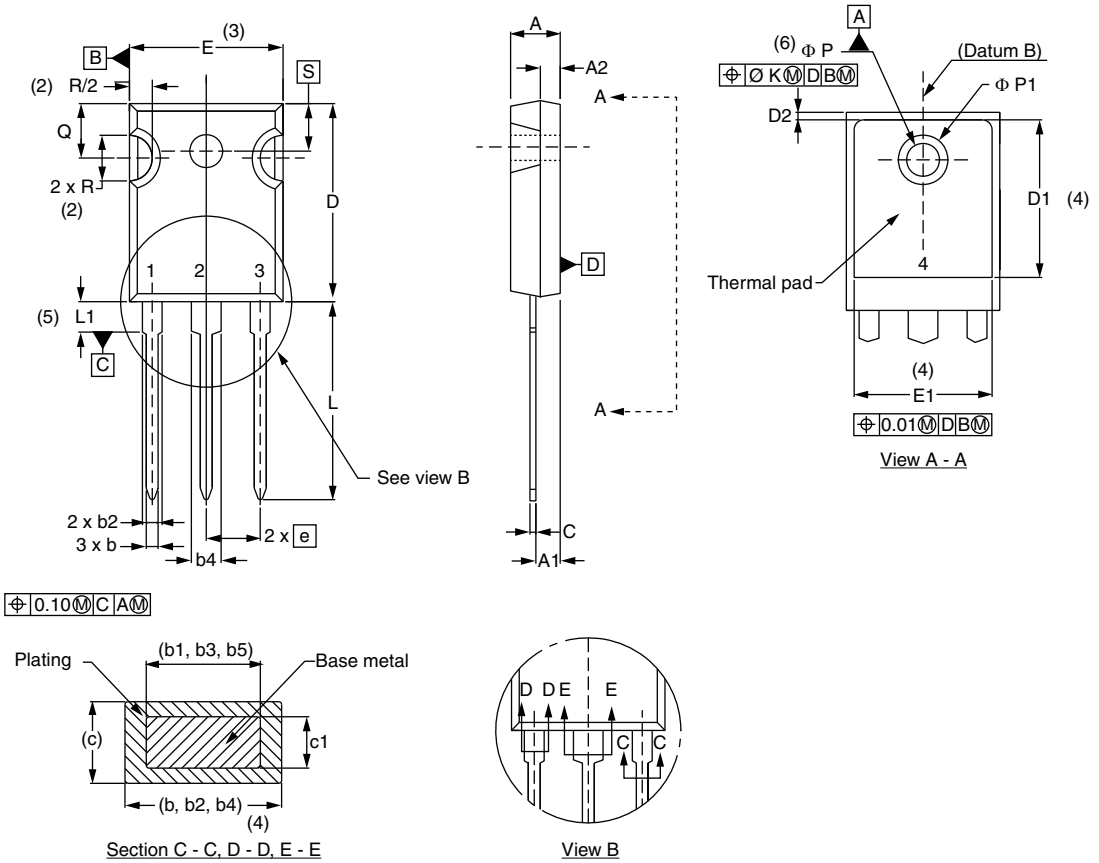

SYMBOL	MILLIMETERS		INCHES		NOTES
	MIN.	MAX.	MIN.	MAX.	
A	4.65	5.31	0.183	0.209	
A1	2.21	2.59	0.087	0.102	
A2	1.50	2.49	0.059	0.098	
b	0.99	1.40	0.039	0.055	
b1	0.99	1.35	0.039	0.053	
b2	1.65	2.39	0.065	0.094	
b3	1.65	2.34	0.065	0.092	
b4	2.59	3.43	0.102	0.135	
b5	2.59	3.38	0.102	0.133	
c	0.38	0.89	0.015	0.035	
c1	0.38	0.84	0.015	0.033	
D	19.71	20.70	0.776	0.815	3
D1	13.08	-	0.515	-	4

SYMBOL	MILLIMETERS		INCHES		NOTES
	MIN.	MAX.	MIN.	MAX.	
D2	0.51	1.30	0.020	0.051	
E	15.29	15.87	0.602	0.625	3
E1	13.46	-	0.53	-	
e	5.46 BSC		0.215 BSC		
Ø K	0.254		0.010		
L	19.81	20.32	0.780	0.800	
L1	3.71	4.29	0.146	0.169	
Ø P	3.56	3.66	0.14	0.144	
Ø P1	-	6.98	-	0.275	
Q	5.31	5.69	0.209	0.224	
R	4.52	5.49	0.178	0.216	
S	5.51 BSC		0.217 BSC		

Notes

(1) Dimensioning and tolerancing per ASME Y14.5M-1994
(2) Contour of slot optional
(3) Dimension D and E do not include mold flash. These dimensions are measured at the outermost extremes of the plastic body
(4) Thermal pad contour optional with dimensions D1 and E1
(5) Lead finish uncontrolled in L1
(6) Ø P to have a maximum draft angle of 1.5 to the top of the part with a maximum hole diameter of 3.91 mm (0.154")
(7) Outline conforms to JEDEC® outline TO-247 with exception of dimension A min., D, E min., Q min., S, and note 4

For technical questions within your region: DiodesAmericas@vishay.com, DiodesAsia@vishay.com, DiodesEurope@vishay.com

THIS DOCUMENT IS SUBJECT TO CHANGE WITHOUT NOTICE. THE PRODUCTS DESCRIBED HEREIN AND THIS DOCUMENT ARE SUBJECT TO SPECIFIC DISCLAIMERS, SET FORTH AT www.vishay.com/doc?91000

Disclaimer

ALL PRODUCT, PRODUCT SPECIFICATIONS AND DATA ARE SUBJECT TO CHANGE WITHOUT NOTICE TO IMPROVE RELIABILITY, FUNCTION OR DESIGN OR OTHERWISE.

Vishay Intertechnology, Inc., its affiliates, agents, and employees, and all persons acting on its or their behalf (collectively, “Vishay”), disclaim any and all liability for any errors, inaccuracies or incompleteness contained in any datasheet or in any other disclosure relating to any product.

Vishay makes no warranty, representation or guarantee regarding the suitability of the products for any particular purpose or the continuing production of any product. To the maximum extent permitted by applicable law, Vishay disclaims (i) any and all liability arising out of the application or use of any product, (ii) any and all liability, including without limitation special, consequential or incidental damages, and (iii) any and all implied warranties, including warranties of fitness for particular purpose, non-infringement and merchantability.

Statements regarding the suitability of products for certain types of applications are based on Vishay's knowledge of typical requirements that are often placed on Vishay products in generic applications. Such statements are not binding statements about the suitability of products for a particular application. It is the customer's responsibility to validate that a particular product with the properties described in the product specification is suitable for use in a particular application. Parameters provided in datasheets and / or specifications may vary in different applications and performance may vary over time. All operating parameters, including typical parameters, must be validated for each customer application by the customer's technical experts. Product specifications do not expand or otherwise modify Vishay's terms and conditions of purchase, including but not limited to the warranty expressed therein.

Hyperlinks included in this datasheet may direct users to third-party websites. These links are provided as a convenience and for informational purposes only. Inclusion of these hyperlinks does not constitute an endorsement or an approval by Vishay of any of the products, services or opinions of the corporation, organization or individual associated with the third-party website. Vishay disclaims any and all liability and bears no responsibility for the accuracy, legality or content of the third-party website or for that of subsequent links.

Except as expressly indicated in writing, Vishay products are not designed for use in medical, life-saving, or life-sustaining applications or for any other application in which the failure of the Vishay product could result in personal injury or death. Customers using or selling Vishay products not expressly indicated for use in such applications do so at their own risk. Please contact authorized Vishay personnel to obtain written terms and conditions regarding products designed for such applications.

No license, express or implied, by estoppel or otherwise, to any intellectual property rights is granted by this document or by any conduct of Vishay. Product names and markings noted herein may be trademarks of their respective owners.

© 2024 VISHAY INTERTECHNOLOGY, INC. ALL RIGHTS RESERVED